HyperFun Primitives

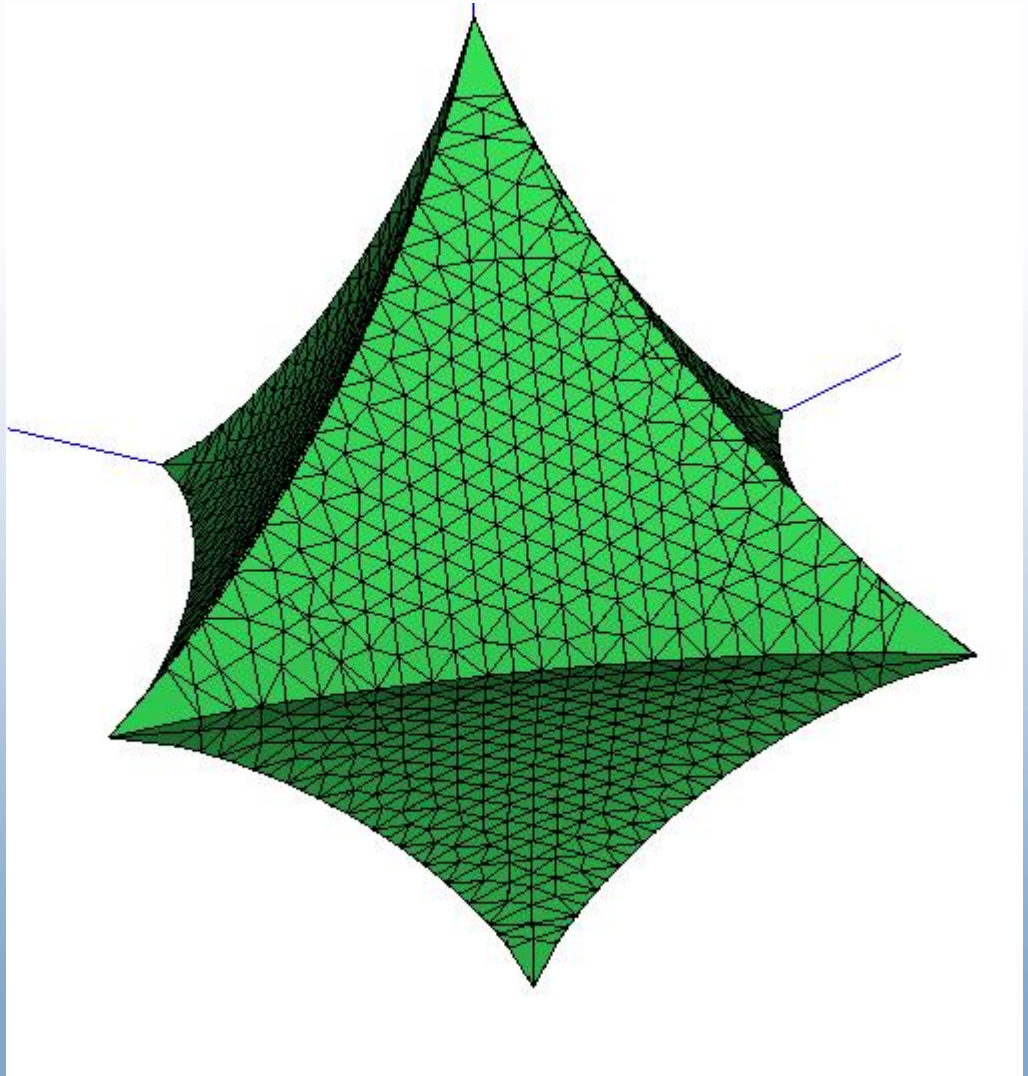

Solid Ball

Solid ball: $R^2-x^2-y^2-z^2 \geq 0$

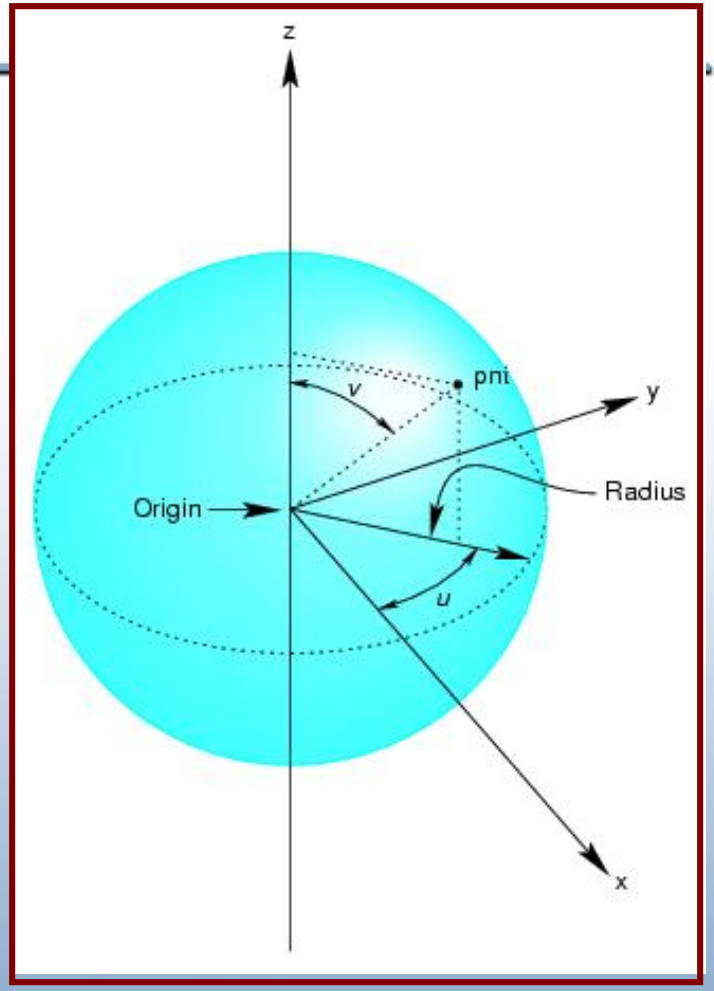

We can model a primitive in HyperFun by typing the analytical expression of its defining function:

```
Ball = R^2-x[1]^2-x[2]^2-x[3]^2;
```

HyperFun: FRep Library

HyperFun has FRep library of predefined geometric objects or **primitives**, and predefined transformations of objects or **operations**. They are used in the model in two basic formates:

- for those, which require point coordinates **x** as input,

hf<Name>(x, <parameters>)

- or simply

hf<Name>(<parameters>)

for others, where <parameters> is comma separated list of input parameters.

HyperFun Library

Primitives

Algebraic primitives: *hfSphere, hfEllipsoid, hfBlock, hfCylinder, hfEllCylinder, hfEllCone, hfTorus, hfSuperel.*

Skeletal objects: *hfBlobby, hfMetaball, hfSoft*

Convolution objects*:* *hfConvPoint, hfConvLine, hfConvArc, hfConvTriangle, hfConvCurve, hfConvMesh*

Procedural objects*:* *hfNoiseG*

Operations

hfScale, hfShift, hfRotate, hfTwist, hfStretch, hfTaper, hfBlendUni, hfBlendInt

Algebraic Surfaces

Surfaces with polynomial *f(x,y,z)*

- Quadratic
  - Sphere
  - Ellipsoid
  - Cylinder
  - Cone

  …
- Torus
- Superellipsoid

Library primitive: Sphere and Solid Ball

Sphere/ball of radius 6:

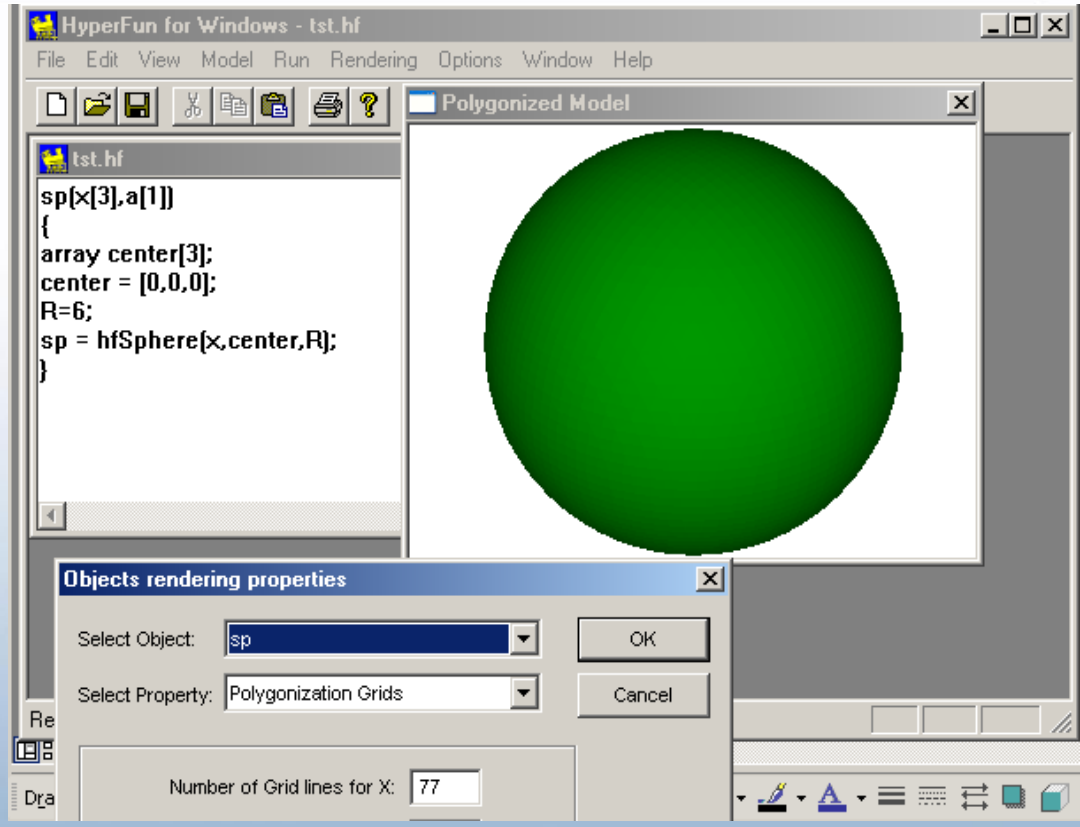


```
sp(x[3],a[1])
{
array center[3];
center = [0,0,0];
R=6;
sp = hfSphere(x,center,R);
}
```

Ellipsoid

$$F(x,y,z) = 1 - (x/a)^2 - (y/b)^2 - (z/c)^2$$

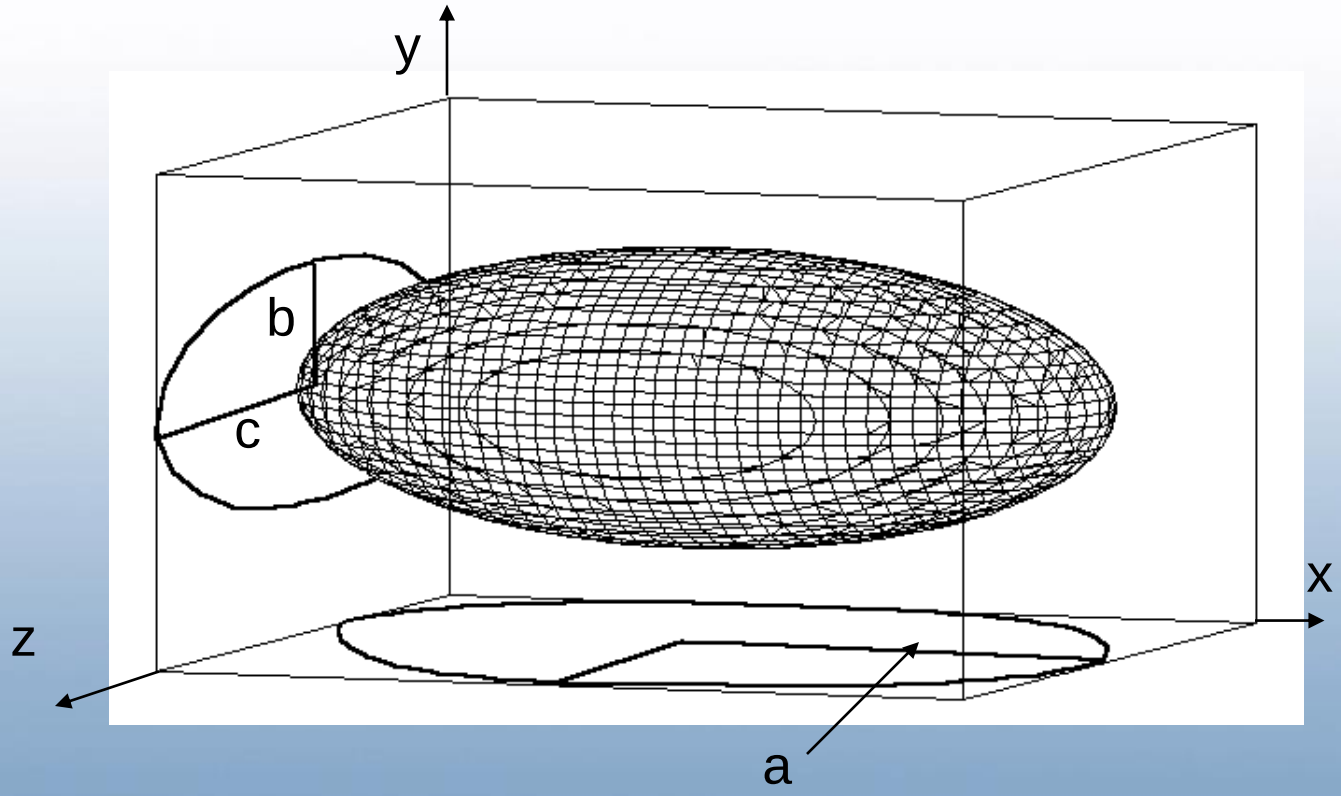

Library primitive: Ellipsoid

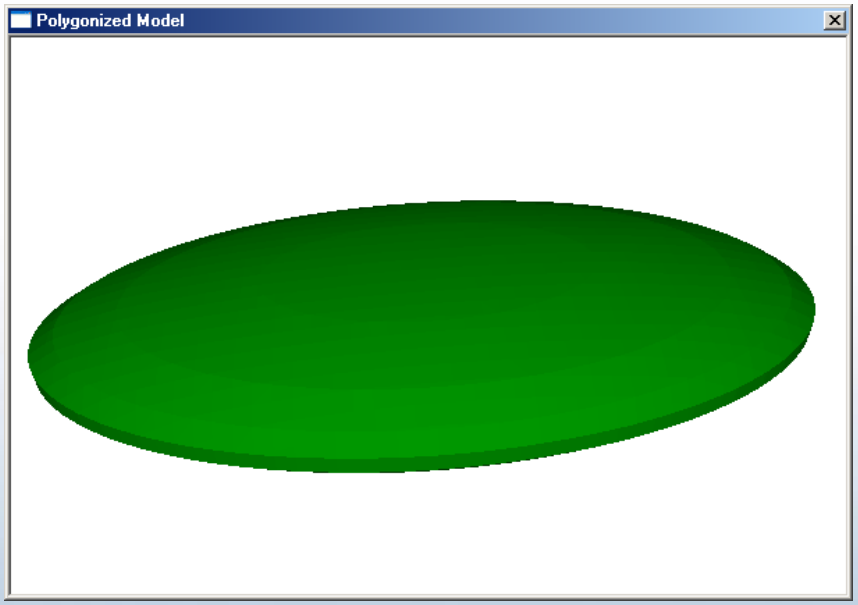

Ellipsoid with half-axes 6,3,1:

```
el(x[3],a[1])
{
array center[3];
center = [0,0,0];
el = hfEllipsoid(x,center,6,3,1);
}
```

Library primitive: Cylinder

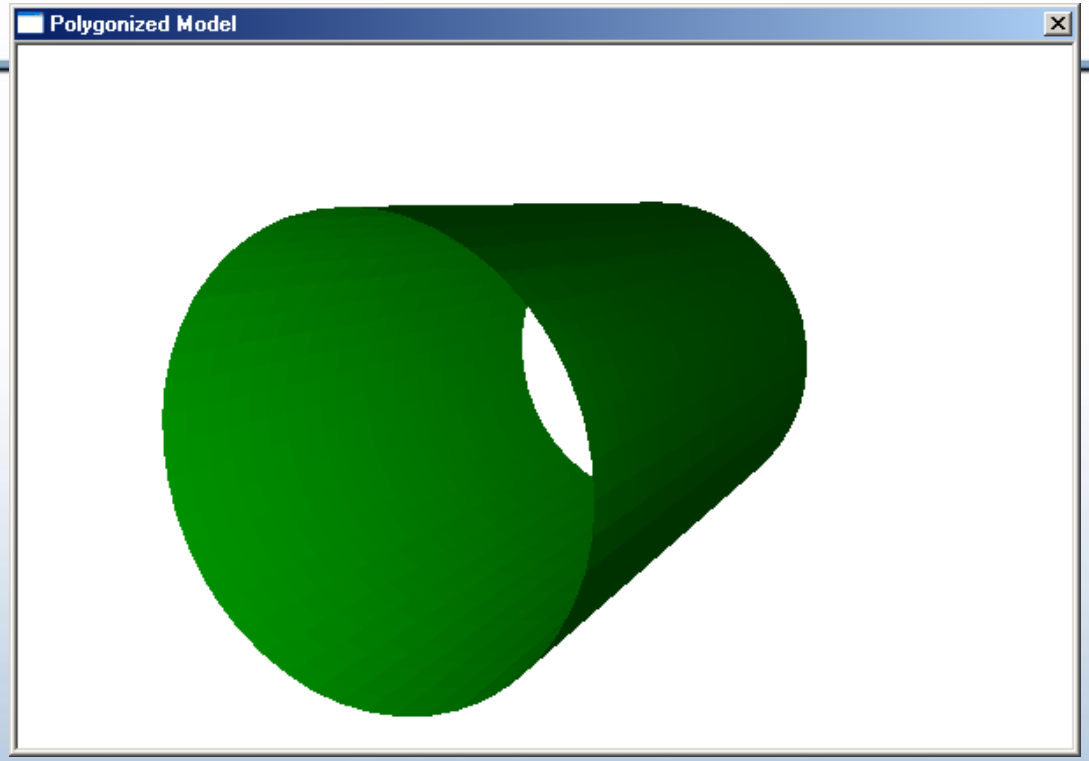

Cylinder with axis Z
and radius 6:

```
cyl(x[3],a[1])
{
array center[3];
center = [0,0,0];
cyl = hfCylinderZ(x,center,6);
}
```

Note: the primitive is infinite solid, the surface is cut on both ends for visualization

Library primitive: Cone

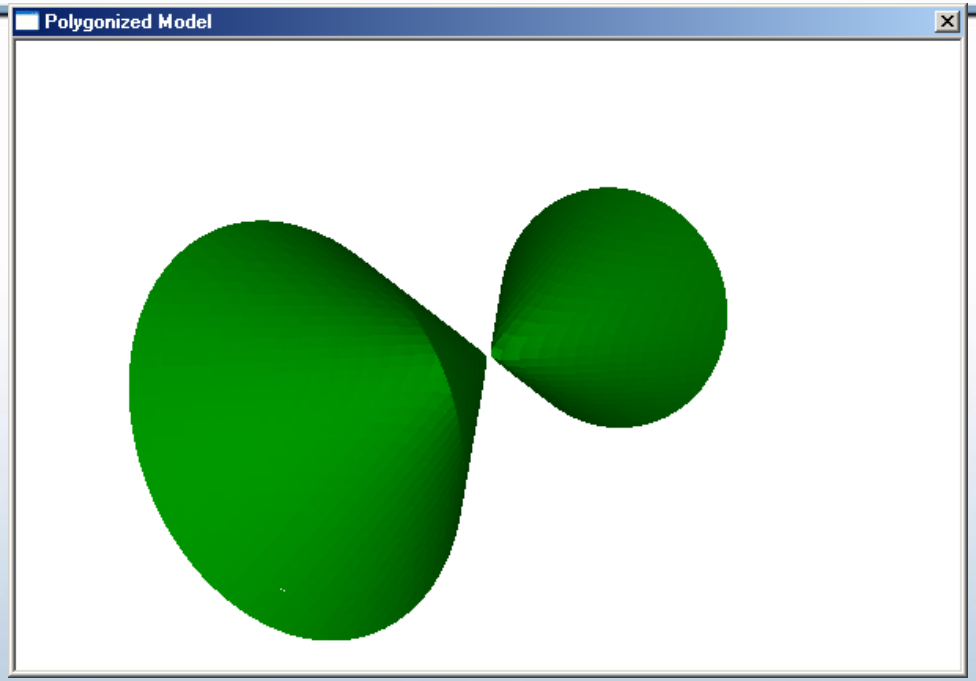

Cone with axis Z and radius 0.5 at height 1:

```
cone(x[3],a[1])
{
array center[3];
center = [0,0,0];
cone = hfConeZ(x,center,0.5);
}
```

Note: the primitive is infinite solid with both branches of the cone present, the surface is cut on both ends for visualization

Torus

$$F(x,y,z) = r_0^2 - x^2 - y^2 - z^2 - R^2 + 2R\sqrt{x^2+y^2}$$

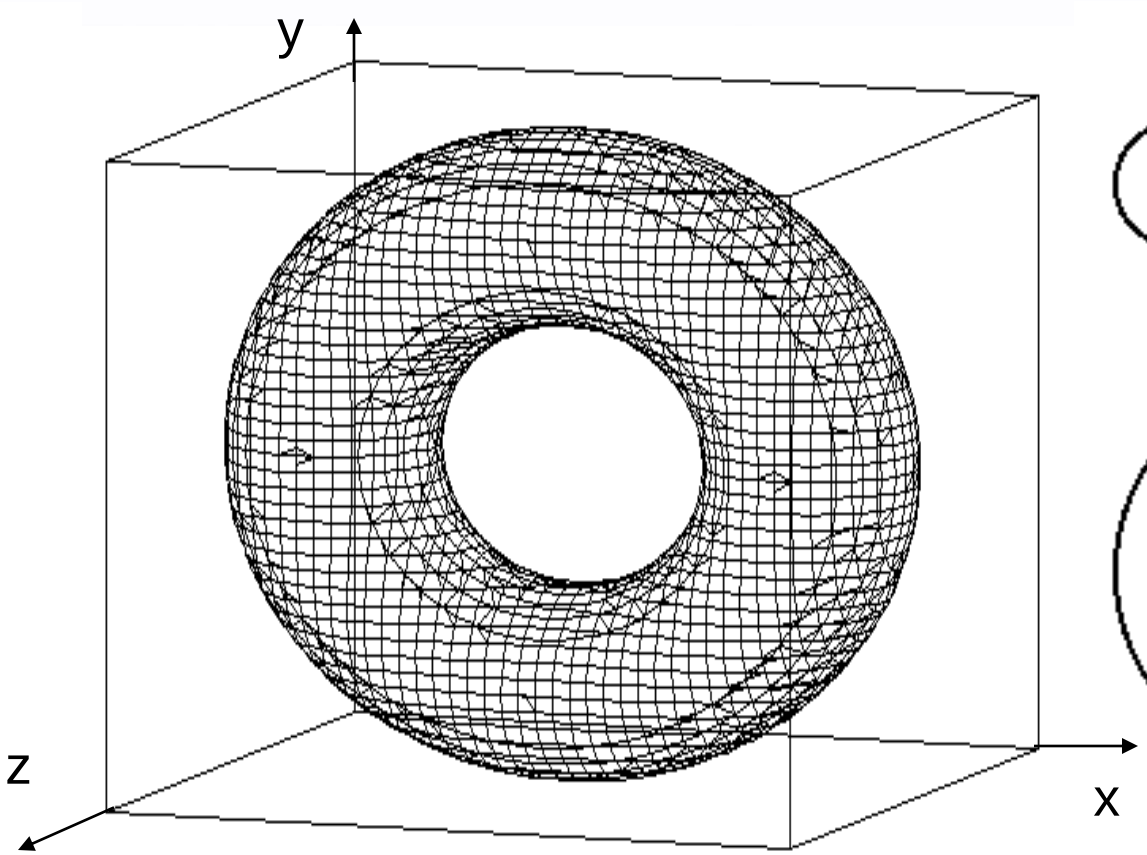

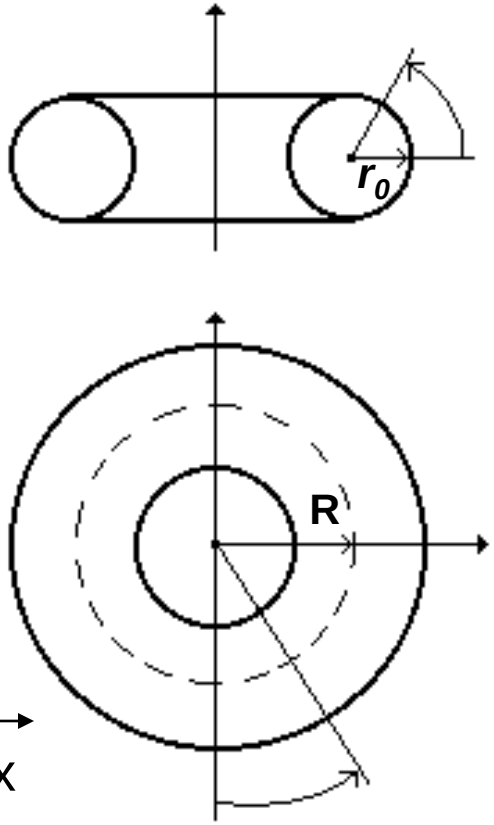

Library primitive: Torus

Torus with axis Z,
radii R=6 and r0=3:

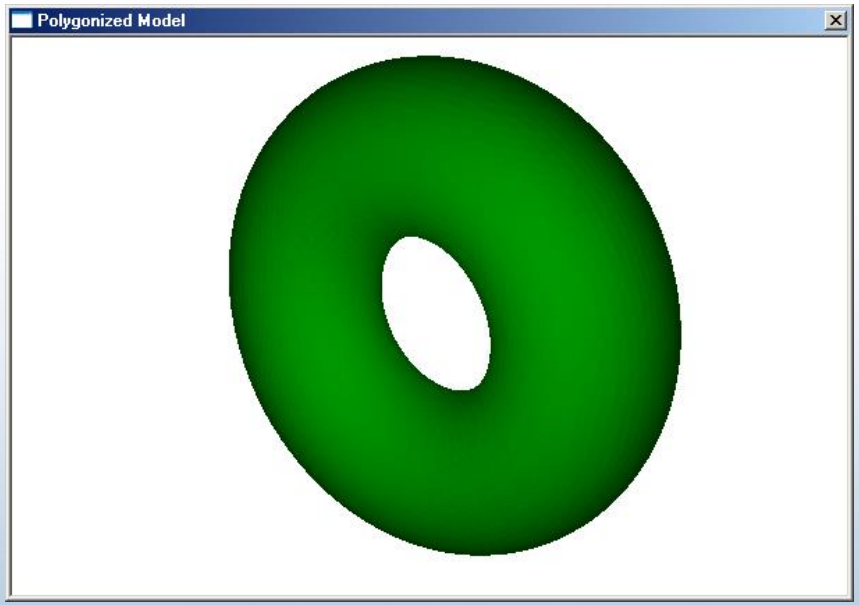


```
torus(x[3],a[1])
{
array center[3];
center = [0,0,0];
R=6;
r0=3;
torus =
  hfTorusZ(x,center,R,r0);
}
```

Superellipsoids

$$f(x,y,z) = 1 - \left[\left(\frac{x}{r_x} \right)^{\frac{2}{s_2}} + \left(\frac{y}{r_y} \right)^{\frac{2}{s_2}} \right]^{\frac{s_2}{s_1}} - \left(\frac{z}{r_z} \right)^{\frac{2}{s_1}}$$

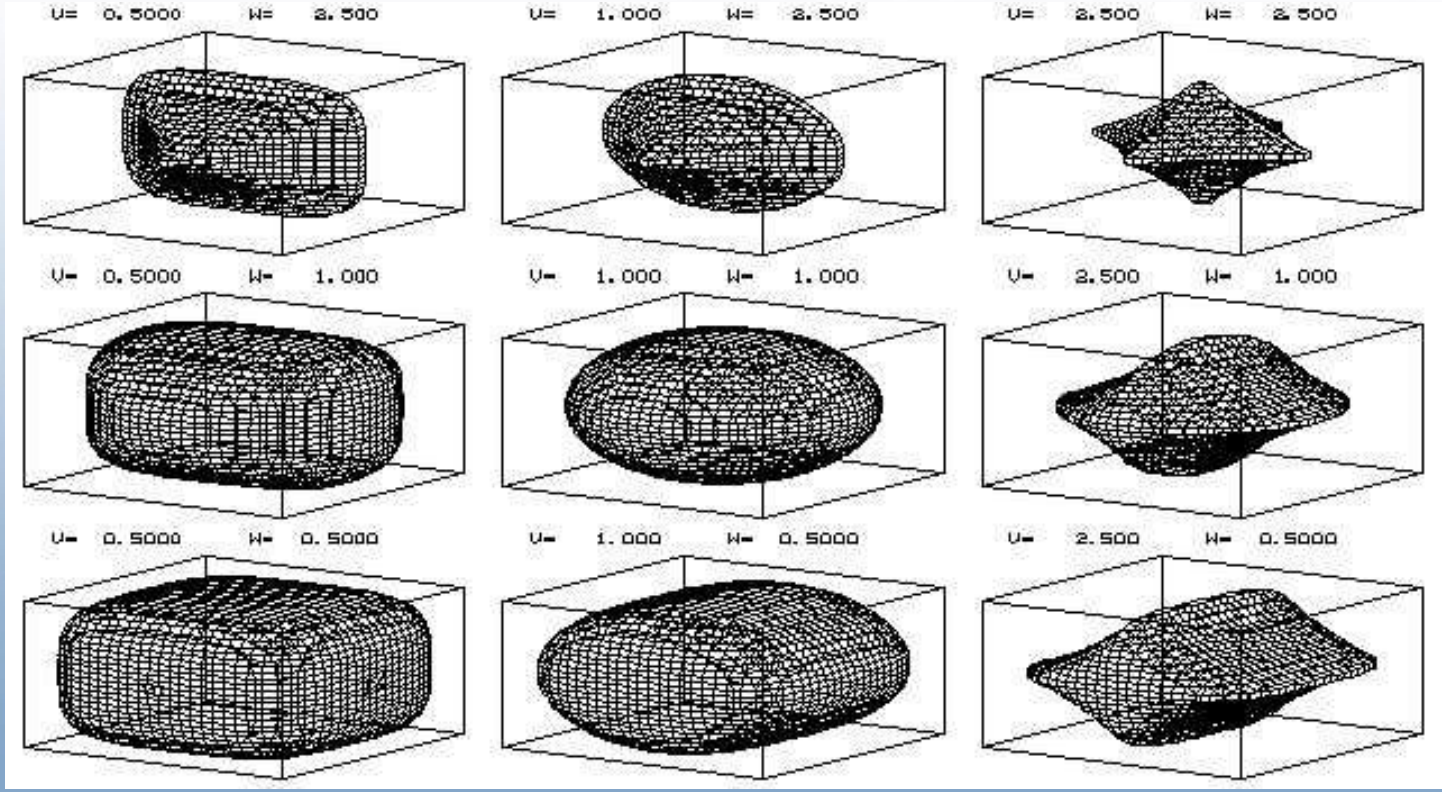

Library primitive: Superellipsoid

Superellipsoid with parameters $s_1 = s_2 = 0.2$

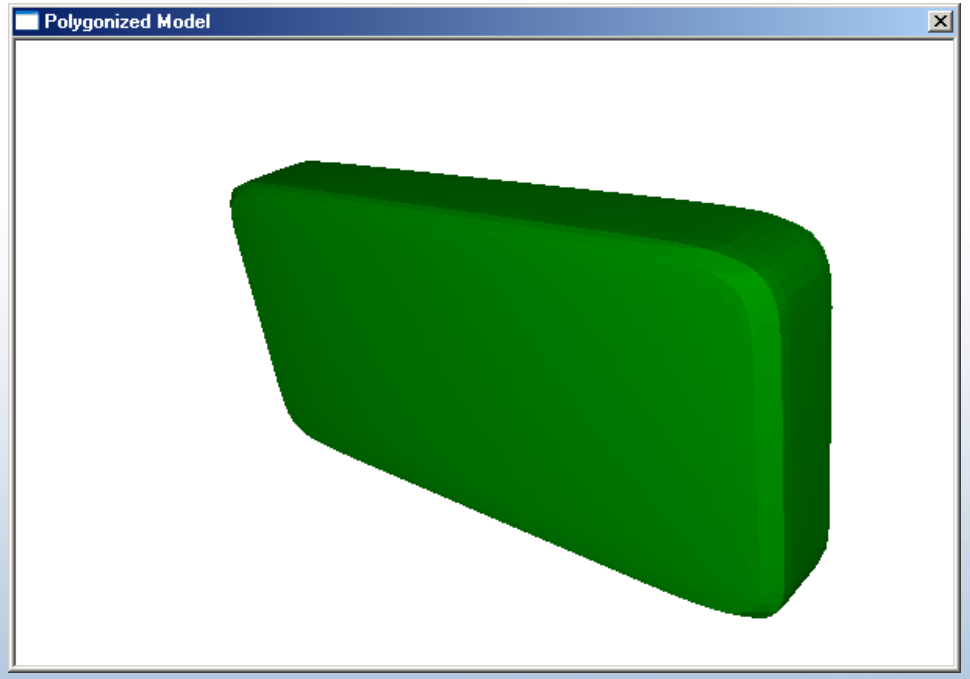


```
super(x[3],a[1])
{
array center[3];
center = [0,0,0];
super =
  hfSuperell(x,center,6,3,1,0.2,0.2);
}
```

Superellipsoids